COL-MET SPRAY BOOTHS ARE
MFG. IN ACCORDANCE WITH IFC-2000
SECTION 1504.1.2.1 THROUGH 1504.1.2.2,
SECTION 1504.2.3, SECTION 1504.2.5,
SECTION 1504.2.7, SECTION 1504.3,
SECTION 1504.3.1, SECTION 1504.3.2,
AND NFPA-33

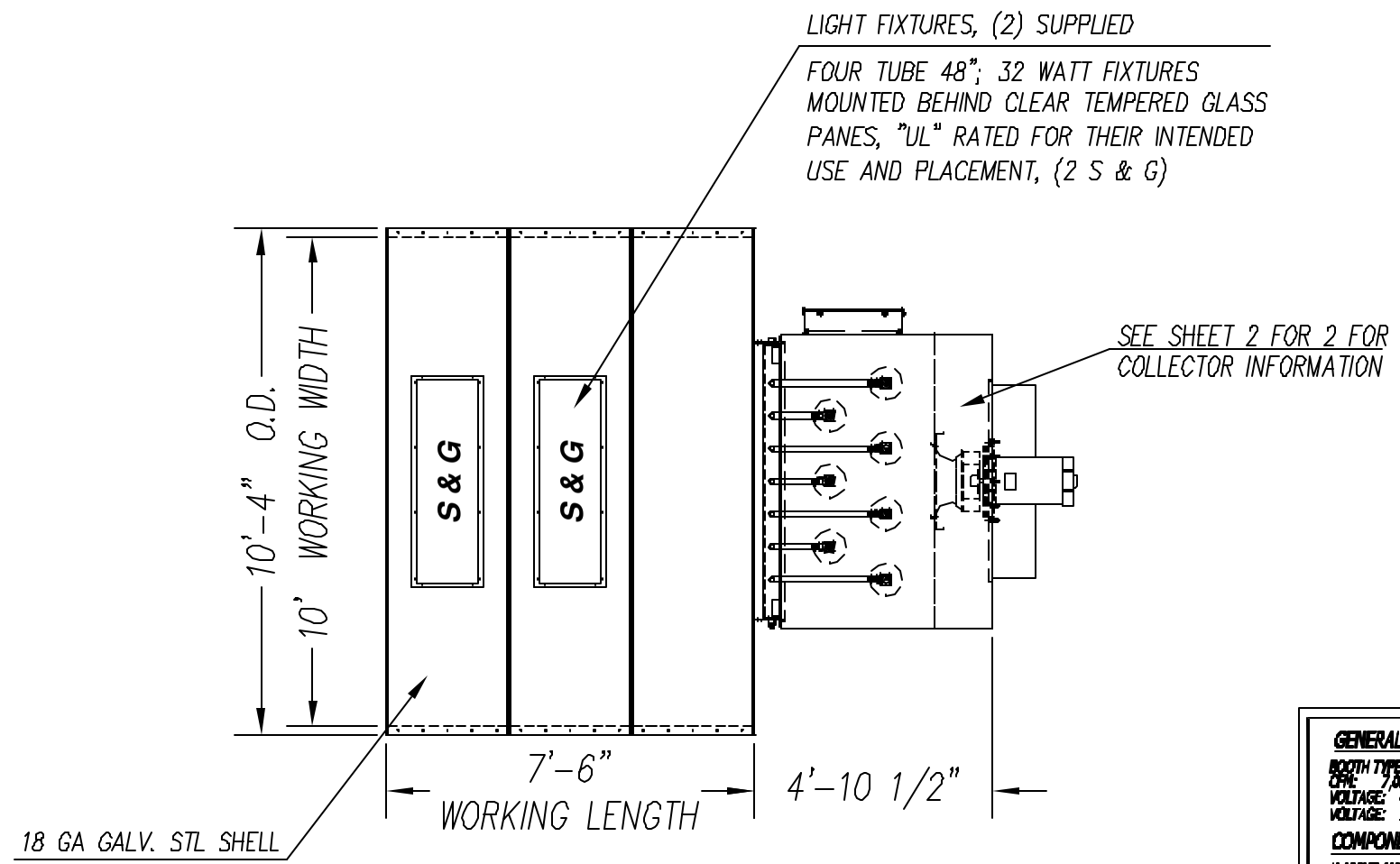

PLAN VIEW

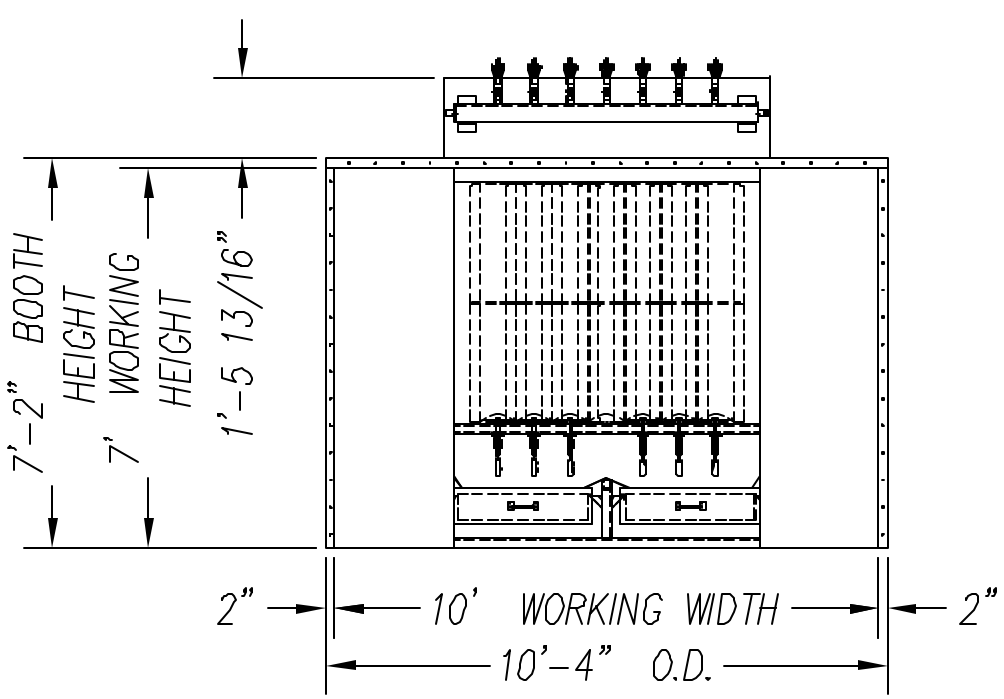

END VIEW

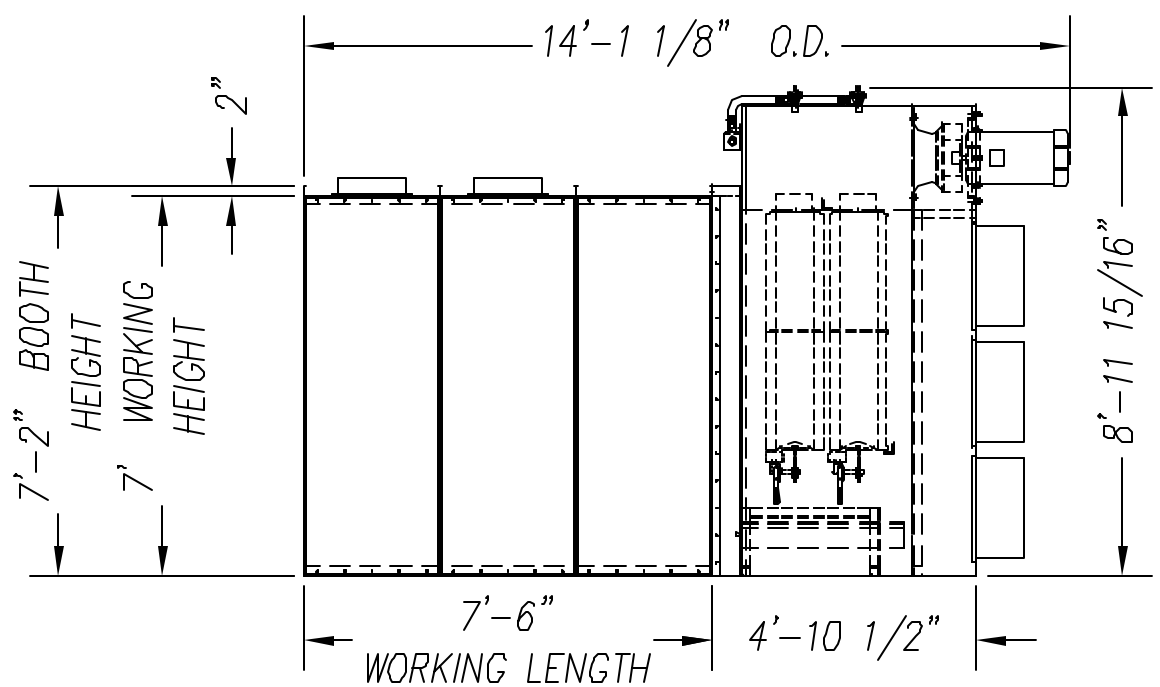

SIDE ELEVATION

THE ASSEMBLY DRAWINGS YOU HAVE RECEIVED ARE FOR GENERAL REFERENCE. OPTIONAL ACCESSORIES MAY NOT BE SHOWN AS PROVIDED. PLEASE REFER TO YOUR PURCHASE ORDER FOR A COMPLETE DESCRIPTION OF YOUR BOOTH ORDER.

APPROVAL DRAWING
MANUFACTURING WILL AWAIT APPROVAL
END USER SIGNATURE: _____
MOTOR SUPPLY VOLTAGE: _____
LIGHT SUPPLY VOLTAGE: _____
PLEASE SIGN THE APPROVAL DRAWING, MAKE ANY NOTES TO DRAWING THAT MAY AFFECT ORDER. NOTE: ANY CHANGES TO DRAWING MAY EFFECT CHARGES, DELAY APPROVAL PROCESS AND DELAY THE PRODUCTION OF YOUR ORDER.

VOLTAGE CONFIRMATION
MOTOR 480/3/60 VAC
LIGHTS 120/60 VAC
IF DIFFERENT, INDICATE BELOW
___ / ___ / ___ VAC
___ / ___ / ___ VAC

GENERAL NOTES:

BOOTH TYPE: RPB 1007-7.5
CFM: 7,000 — STATIC PRESSURE: 5"
VOLTAGE: 480V 3PH — TOTAL SERVICE AMPS: 30
VOLTAGE: 120V — TOTAL SERVICE AMPS: 5

COMPONENT DESCRIPTIONS:

1.) LIGHT AMP TOTAL: 2.1 — TOTAL QTY.: 2
120 AC, 1PH, 60 Hz. — QTY.: 2 — TYPE: S & G
QTY.: — TYPE:

2) EXHAUST FAN SIZE: 16 1/2"Ø — QTY: 1 — MODEL NO:
WITH 15 HP, — OCP — TYPE MOTOR — 21 AMPS

3) INTAKE FILTER TOTAL 7 — TYPE OF FILTER CARTRIDGE
4) EXHAUST FILTER TOTAL 6 — TYPE OF FILTER 24" X 24" X 12" FINAL

GENERAL NOTES:

1. WORK CHAMBER WILL BE BOLTED CONSTRUCTION WITH #5/16" BOLTS ON STANDARD 6" CENTERS. COLLECTOR WILL BE WELDED CONSTRUCTION.
2. WORK CHAMBER TO BE 18 GA. GALVANIZED UNPAINTED SHEET METAL. COLLECTOR TO BE PAINTED MILD STEEL.
3. ALL MOTOR CONTROLS SWITCHES, LIGHT LAMPS OR TUBES, INCLUDING CONNECTIONS TO EQUIPMENT TO BE FURNISHED AND INSTALLED BY CUSTOMER EXCEPT AS NOTED.
4. IT SHALL BE THE CUSTOMERS RESPONSIBILITY TO PROVIDE ADEQUATE CLEAN, DRY COMPRESSED AIR.
5. ALL LOCAL, CITY & STATE PERMITS AND INSURANCE APPROVAL TO BE OBTAINED BY CUSTOMER.

COL-MET spray booths

FILE NAME	
CONTRACT NO –	RPB 1007-7.5 APPROVAL
DRAWN 11/14/2005 pwelch	RPB 1007-7.5
CHECK	7,000 CFM
APPR.	
ISSUED	

SIZE	FSCM NO	DWG NO	REV
B	–	132-1007-7.5-01-01.DWG	
SCALE		WEIGHT	SHEET 1 OF 2