THE ASSEMBLY DRAWINGS YOU HAVE RECEIVED ARE IN A GENERIC FORMAT. OPTIONAL ACCESSORIES MAY NOT BE SHOWN AS PROVIDED. PLEASE REFER TO YOUR PURCHASE ORDER FOR A COMPLETE DESCRIPTION OF YOUR BOOTH ORDER.

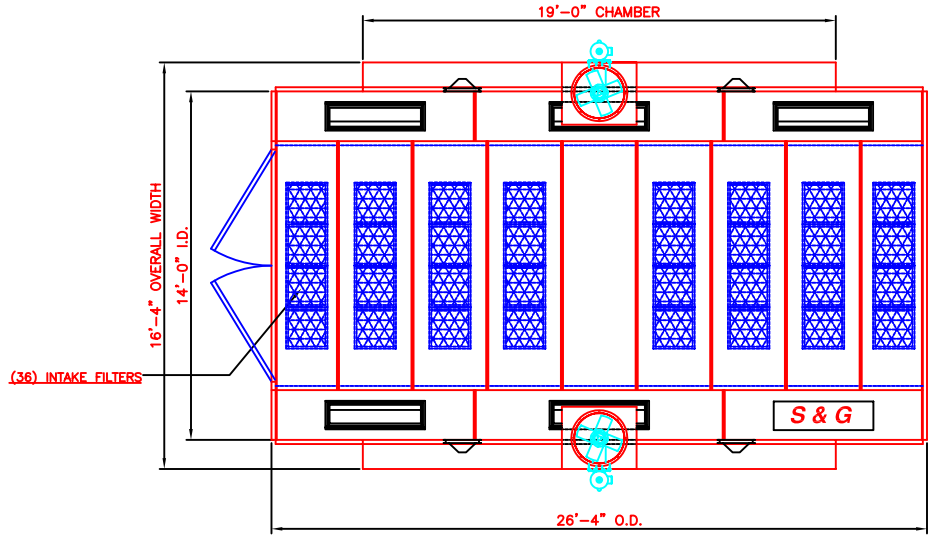


PLAN VIEW

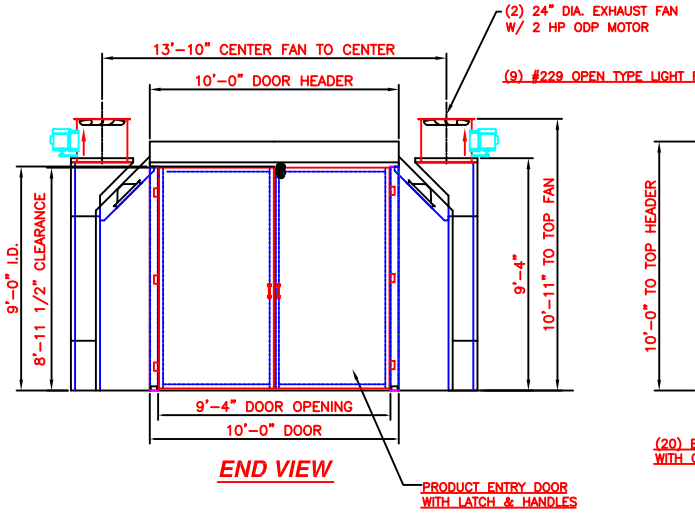


END VIEW

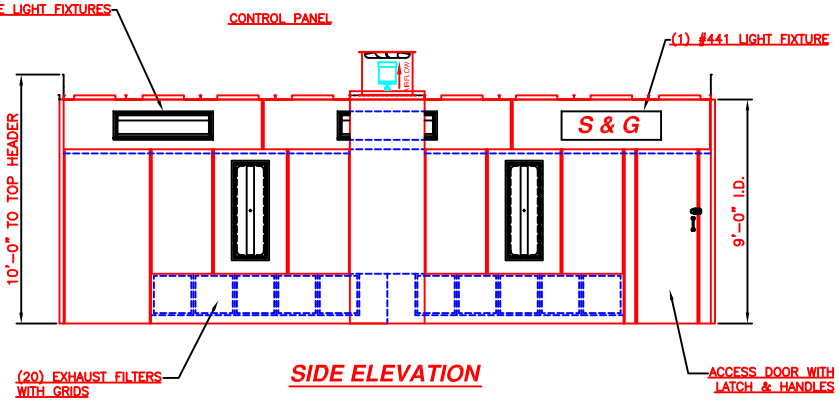


SIDE ELEVATION

| REV. # | DESCRIPTION | BY: | DATE |
|---|---|---|---|
| | | | |
| | | | |
| | | | |
| | | | |
| | | | |
| | | | |
| | | | |
| | | | |

DESIGNED BY
DRAWN BY
CHECKED BY OT
DATE
SCALE NTS
APPROVED BY

COL-MET spray booths

CUSTOMER
PROJECT EZ SIDE DOWNDRAFT BOOTH
TITLE ESD-1409-26-01-01
JOB NO.
DWG. NO. 104-1409-26-01-01
SHEET 1 OF 3